California Polytechnic State University Pomona
DEPARTMENT OF ELECTRICAL & COMPUTER ENGINEERING

Digital Logic Design Laboratory

ECE 2300L

Report #5 Experiment 7

Multiplexers (MUX)

Prepared by

Kevyn Santos & Yanming Feng

Presented to

Dr. Yazdy R Mostafa

October 12 , 2023

Introduction:

In this lab we will use a multiplexer (74LS151) to design, implement, and test a digital function.

Prelab:

<u>Multiplexer (74LS151) Pinout:</u>

Connection Diagram

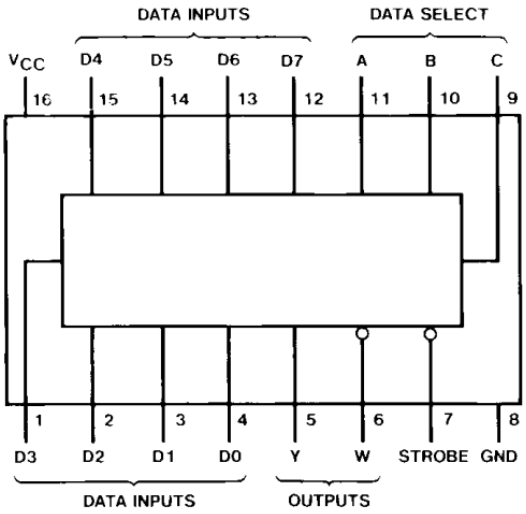

Truth Table

Inputs				Outputs	
Select			Strobe	Y	W
C	B	A	S		
X	X	X	H	L	H
L	L	L	L	D0	$\overline{D0}$
L	L	H	L	D1	$\overline{D1}$
L	H	L	L	D2	$\overline{D2}$
L	H	H	L	D3	$\overline{D3}$
H	L	L	L	D4	$\overline{D4}$
H	L	H	L	D5	$\overline{D5}$
H	H	L	L	D6	$\overline{D6}$
H	H	H	L	D7	$\overline{D7}$

H = HIGH Level
L = LOW Level
X = Don't Care
D0, D1...D7 = the level of the respective D input

The switch position is controlled by the state of three Select inputs, S0, S1, S2. The strobe input is active LOW. When it is not activated, the negation output is HIGH and the assertion output is LOW regardless of all other inputs. The D0-D7 are the eight data input lines. The data on one of these lines will be selected and routed to the output based on the binary code presented by the A, B, and C inputs. The Y output line where the selected data input is routed. The W output line outputs the inverse of the Y output.

Procedure:

Fig 1 shows when we have 14 in binary for our input, our output LED (White) is off.

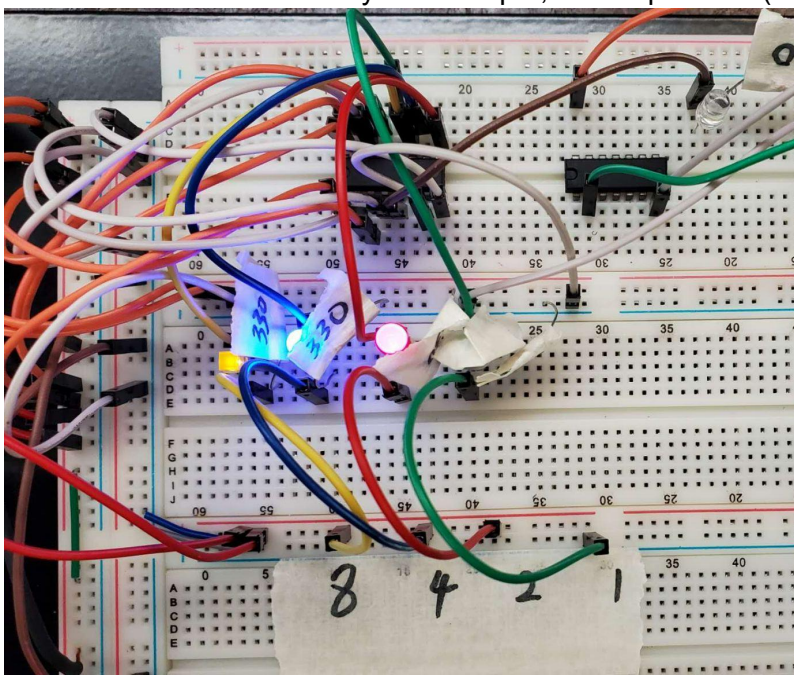

Fig. 1

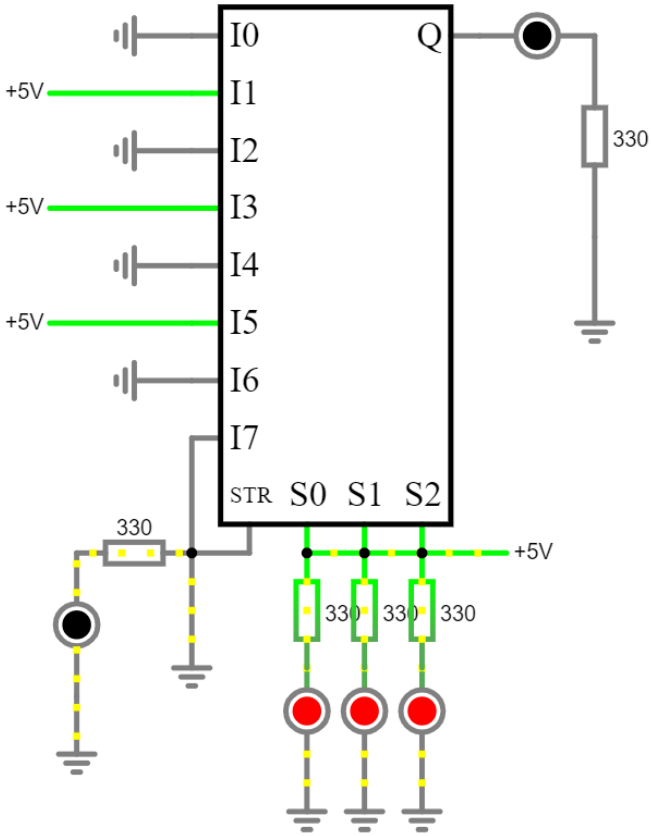

Fig. 1 diagram

Fig. 1B shows when we have 11 in binary for our input, our output LED (White) is off

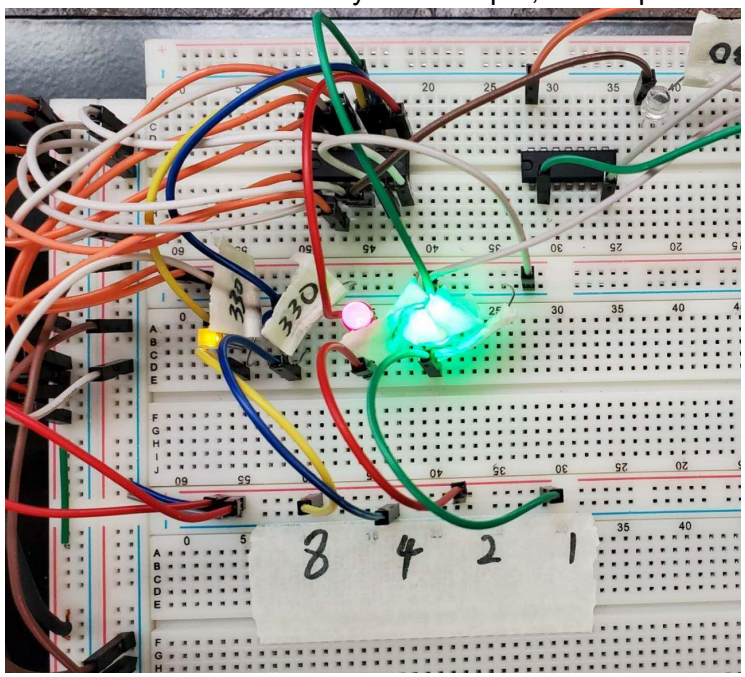

Fig. 1B

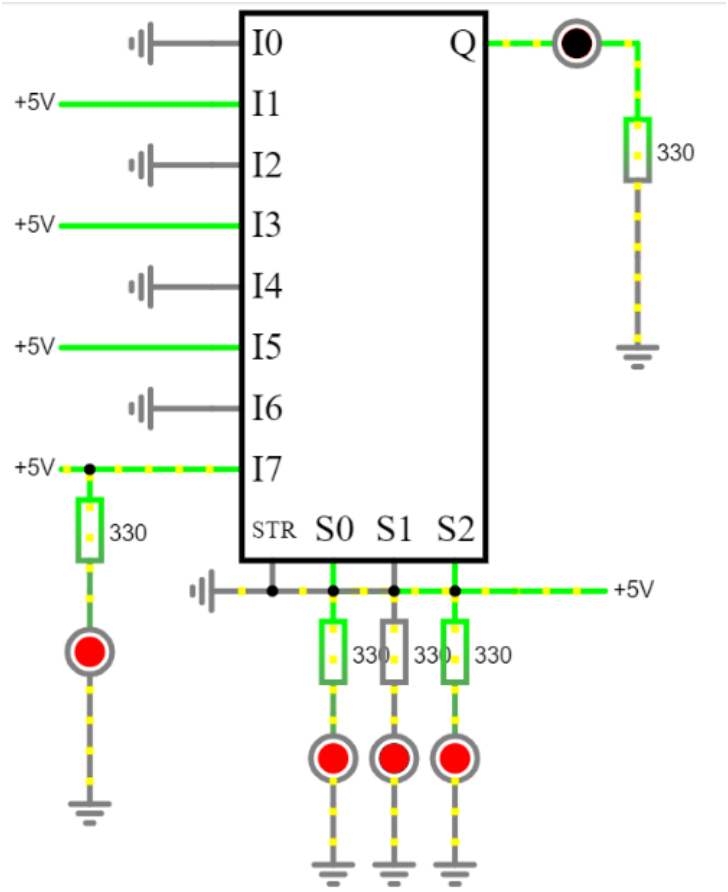

Fig. 1B diagram

Fig 1C. shows when we have 0 in binary for our input, our output LED (White) is off

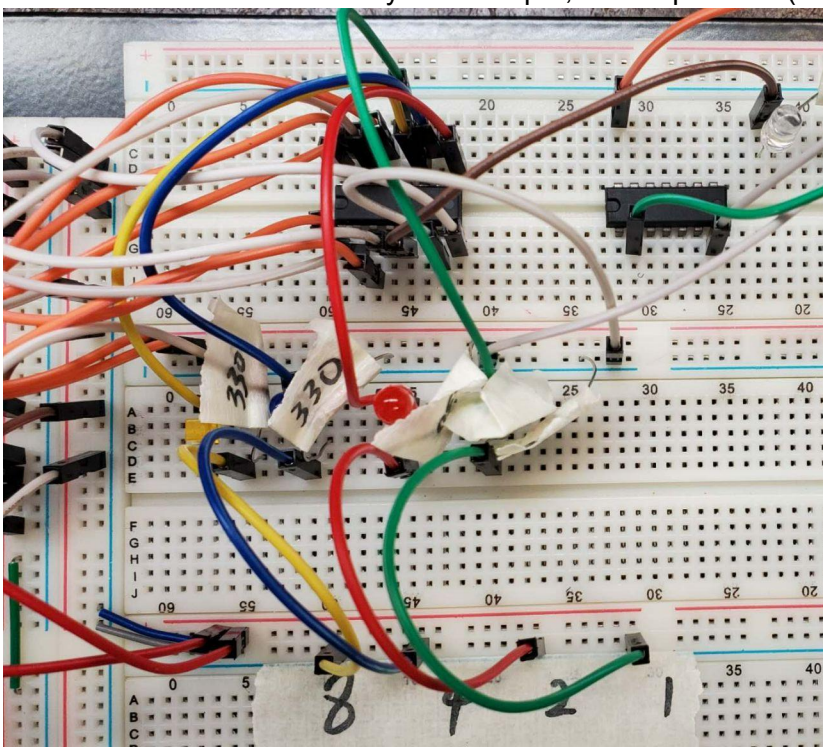

Fig. 1C

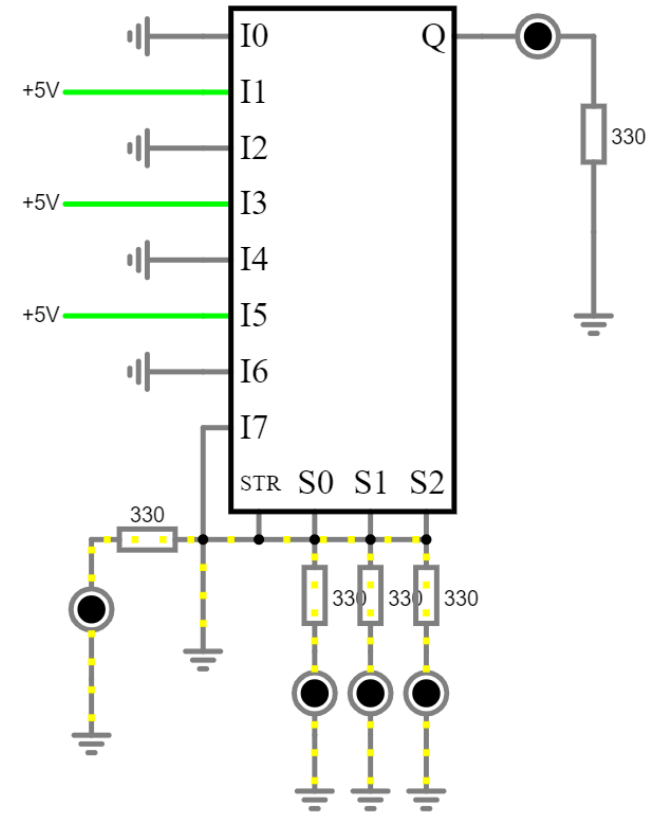

Fig. 1C diagram

Fig. 2A shows when we have 15 in binary for our input, our output LED (White) is on.

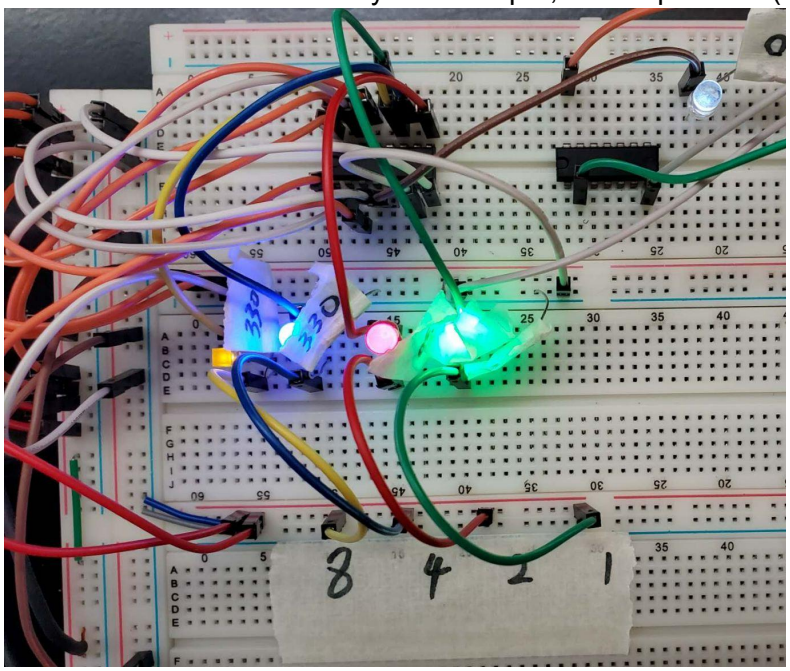

Fig. 2A

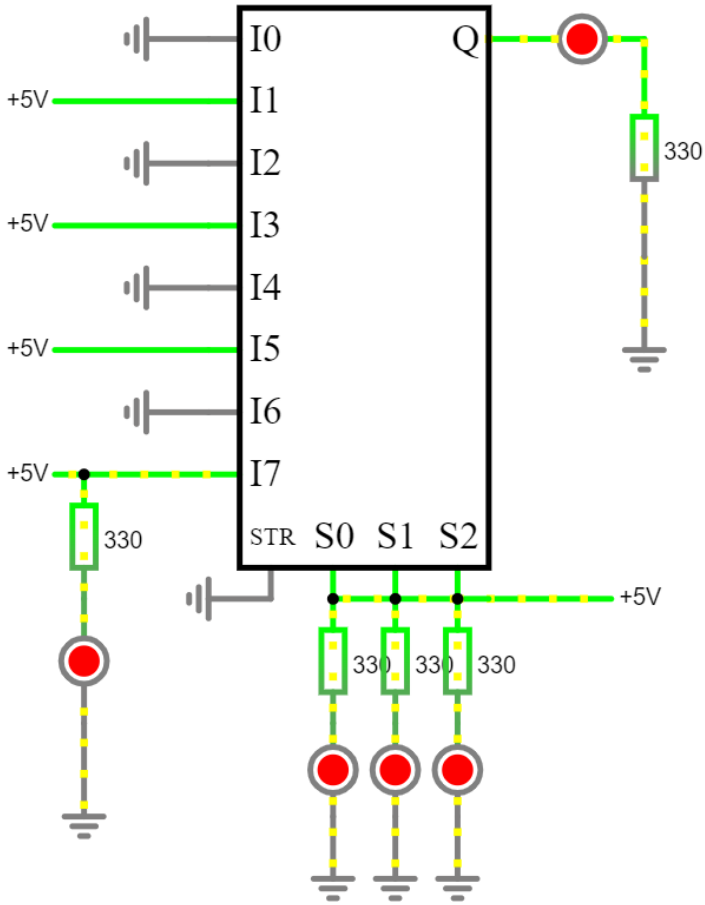

Fig. 2A diagram

Fig. 2B shows when we have 6 in binary for our input, our output LED (White) is on.

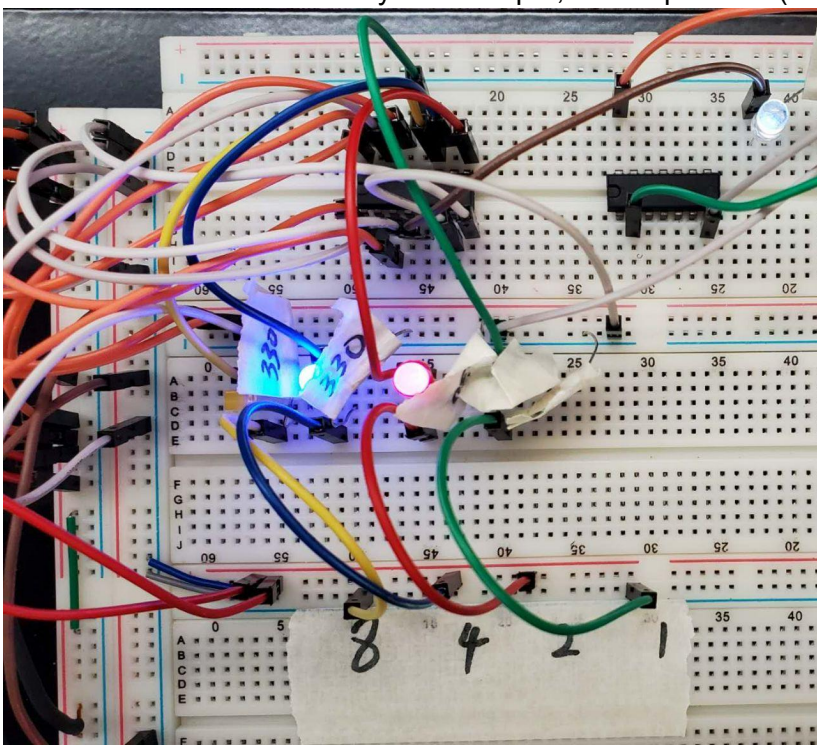

Fig. 2B

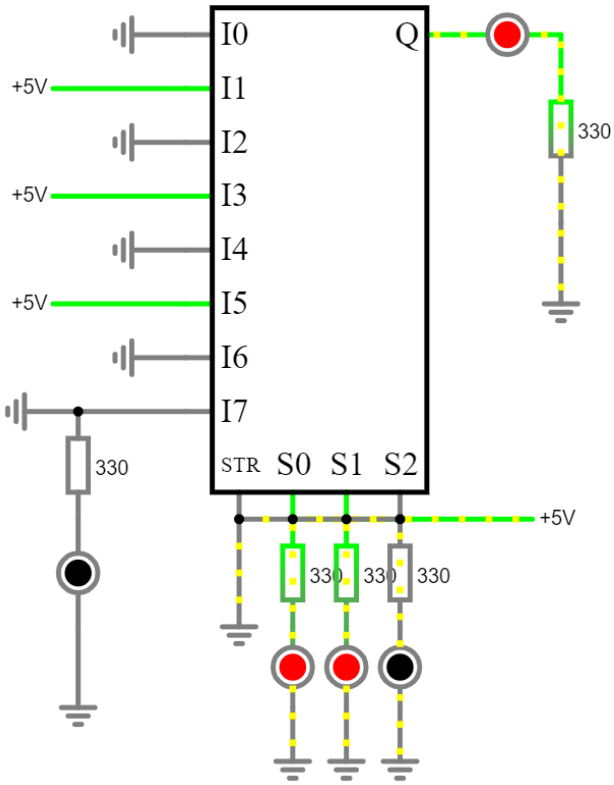

Fig. 2B diagram

Fig. 2C shows when we have 3 in binary for input, our output LED (White) is on.

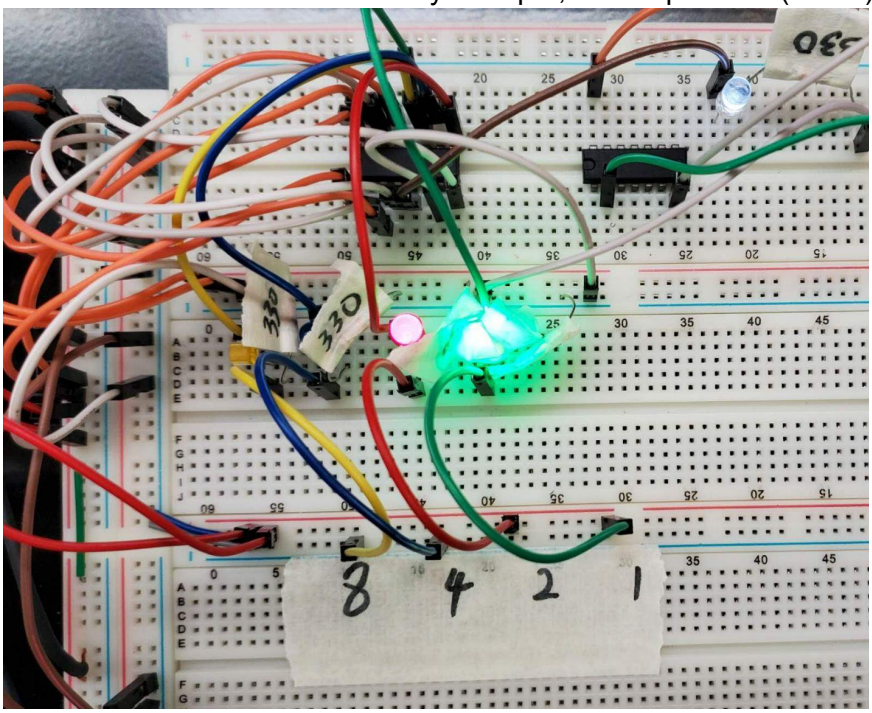

Fig. 2C

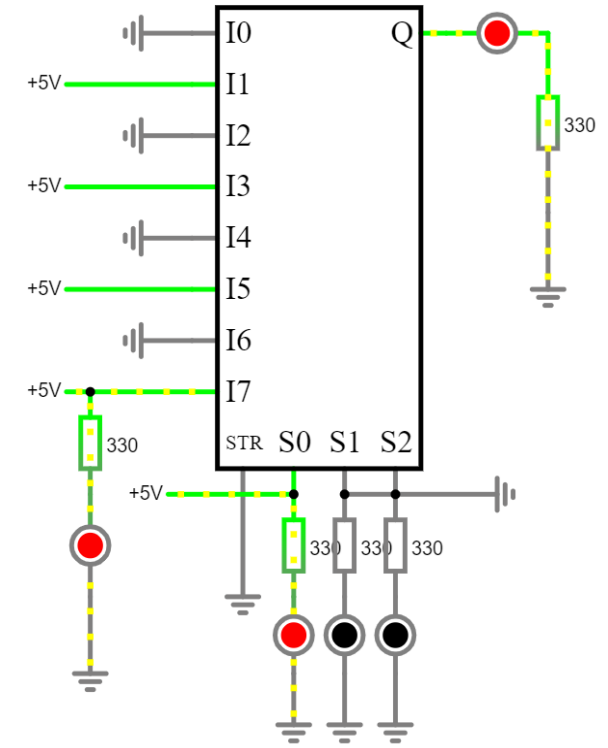

Fig. 2C diagram

Conclusion:

In this laboratory experiment we were able to effectively complete our objective which was to design, implement, and test a digital circuit using an 8 to 1 multiplexer. Our data inputs served as the “choices” depending on what our select inputs were. If it was a certain binary combination it would have its respective data input to output. Overall, we were able to construct and analyze a digital circuit using an 8 to 1 multiplexer. This allowed us to broaden our knowledge of how to effectively use a multiplexer.